ECONSPEAK: A Journal of Advances in Management IT & Social Sciences,
Vol. 7, Issue 12, December 2017 Impact Factor 5.132 ISSN: (2231-4571)
www.skirec.org Email Id: skirec.org@gmail.com

# GRID INTEGRATION INVERTER AND POWER QUALITY ISSUES OF WINDTURBINE TECHNOLOGY, SOLAR ENERGY SYSTEM

**Rajesh Thipparaju[1], Dr. Amit Jain[2]**

**Department of Electrical & Electronics Engineering**

**[1,2]OPJS University, Churu(Rajasthan) – India**

***Abstract***

This paper emphasize on grid integration inverter and power quality issues of wind turbine technology, solar energy system. The expanding number of renewable energy sources and dispersed generators requires new strategies for the operation and administration of the electricity grid with a specific end goal to keep up or even to enhance the power-supply unwavering quality and quality. What's more, progression of the grids prompts new administration structures, in which exchanging of energy and power is winding up progressively imperative. The power-electronic technology assumes an essential role in appropriated generation and in joining of renewable energy sources into the electrical grid, and it is broadly utilized and rapidly extending as these applications turn out to be more integrated with the grid-based systems. Amid the most recent couple of years, power electronics has experienced a quick advancement, which is fundamentally because of two components.

## 1. OVERVIEW

A vigorous power stream calculation which depends on disturbance dismissal control calculation is given in [1]. These methods given in [2] can freely disseminate P and Q double frequency motions. Notwithstanding, the shape and greatness of non-sinusoidal infused currents very build current sounds in the system, which restricts the viability of these methods. Three stage four leg inverters can create sinusoidal voltage waveform in an extensive variety of nonlinear working conditions for more delicate burdens, for example, information exchange and military purposes, since they additionally can issue power quality necessities [3]. In any case, extra stage leg and inductance convolutes the circuit and diminishes the general proficiency. Grid synchronization is of incredible significance for strong control of GCI, quick and precise estimation of grid voltage parameters is basic to work under grid faults. Diverse PLL calculations are accessible in writing expecting to work under grid voltage issues [4].

The first is the advancement of quick semiconductor switches that are equipped for exchanging rapidly and taking care of high powers. The second factor is the presentation of real-time PC controllers that can execute progressed and complex control algorithms. These components together have prompted the advancement of savvy and grid-accommodating converters. In this

research, new patterns in power-electronic technology for the joining of renewable energy sources and energy-stockpiling systems are exhibited. This paper is composed as takes after. We portray the current technology and future patterns in factor speed wind turbines. Wind energy has been demonstrated to be both technically and monetarily practical.

It is normal that current improvements in gearless energy transmission with power-electronic grid interface will prompt another generation of tranquil, proficient, and practical wind turbines. The consistently diminishing prices for the PV modules prompt the expanding significance of cost decrease of the particular PV converters. Energy stockpiling in an electricity generation and supply system empowers the decoupling of electricity generation from demand. At the end of the day, the electricity that can be created at times of either low-demand low-generation cost or from irregular renewable energy sources is moved in time for discharge at times of high-demand high-generation cost or when no other generation is accessible.

**Wind Turbine Technology**

Wind energy has matured to a level of development where it is ready to become a generally accepted utility generation technology. Wind-turbine technology has undergone a dramatic transformation during the last 15 years, developing from a fringe science in the 1970s to the wind turbine of the 2000s using the latest in power electronics, aerodynamics, and mechanical drive train designs [5]. In the last five years, the world wind-turbine market has been growing at over 30% a year, and wind power is playing an increasingly important role in electricity generation, especially in countries such as Germany and Spain. The legislation in both countries favours the continuing growth of installed capacity.

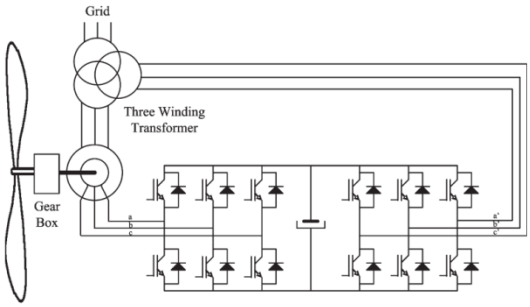


**Figure 1 Single Doubly Fed Induction Machine with Two Fully Controlled AC–DC Power Converters**

Wind power is very unique in relation to the traditional electricity generation with synchronous generators. Further, there are contrasts between the diverse wind-turbine plans accessible available. These distinctions are reflected in the communication of wind turbines with the electrical power system. A comprehension of this is, in this manner, basic for anybody associated with the coordination of wind power into the power system. Besides, another technology has been produced in the wind power advertise presenting variable-speed working conditions relying upon the

wind speed keeping in mind the end goal to upgrade the energy caught from the wind.

## 2.CURRENT WIND POWER TECHNOLOGY

Variable-speed wind turbines have progressed dramatically in recent years. Variable-speed operation can only be achieved by decoupling the electrical grid frequency and mechanical rotor frequency. To this end, power-electronic converters are used, such as a$ac-dc-ac$ converter combined with advanced control systems.

1. **Variable-Speed Concept Utilizing Doubly Fed Induction Generator (DFIG):** In a variable-speed turbine with DFIG, the converter feeds the rotor winding, while the stator winding is connected directly to the grid. This converter, thus decoupling mechanical and electrical frequencies and making variable-speed operation possible, can vary the electrical rotor frequency. This turbine cannot operate in the full range from zero to the rated speed, but the speed range is quite sufficient

2. **Variable-Speed Concept Utilizing Full-Power Converter:** In this concept, the generator is completely decoupled from the grid [6]. The energy from the generator is rectified to a dc link and after is converted to suitable ac energy for the grid. The majority of these wind turbines are equipped with a multipole synchronous generator, although it is quite possible (but rather rare) to use an induction generator and a gearbox. There are several benefits of removing the gearbox: reduced losses, lower costs due to the elimination of this expensive components, and increased reliability due to the elimination of rotating mechanical components. Enercon supplies such technology.

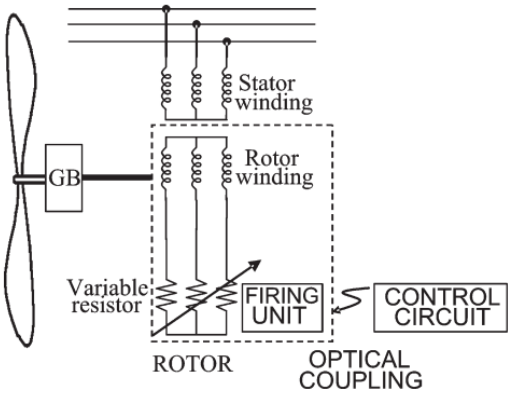


**Figure2 Single Doubly Fed Induction Machine Controlled With Slip Power Dissipation inan Internal Resistor**

Figure2 shows the plan of a full power converter for a wind turbine. The machine-side three-phase converter fills in as a driver controlling the torque generator, utilizing a vector control strategy.

**Semiconductor-Device Technology:** Improvements in the performance and dependability of power-electronic variable frequency drives for wind-turbine applications have been directly identified with the accessibility of power semiconductor devices with better electrical qualities and lower prices in light of the fact

that the gadget performance decides the size, weight, and cost of the whole power electronics utilized as interfaces in wind turbines.

Recently, the integrated gated control thyristor (IGCT) has been produced as a mechanical incorporation of a GTO in addition to a fragile hard drive circuit that transforms the GTO into a modern high-performance segments with an expansive safe operation area (SOA), lower exchanging misfortunes, and a short storage time.

### 2.1Grid-Connection Standards

**Voltage Fault Ride-Through Capability of Wind Turbines:** As the wind limit expands, network administrators need to guarantee that purchaser power quality isn't imperilled. To empower a substantial scale utilization of the wind energy without trading off the power-system strength, the turbines should remain connected and add to the grid in the event of a disturbance, for example, a voltage dip.

**Power-Quality Requirements for Grid-Connected Wind Turbines:** The grid collaboration and grid effect of wind turbines have been centredon amid a previous couple of years. The purpose of this intrigue is that wind turbines are among the utilities thought to be potential sources of awful power quality. Estimations demonstrate that the power-quality effect of wind turbines has been enhanced in recent years.

Grid gets to technology as high-voltage dc (HVDC) can associate the wind-cultivate parks to the grid and transmit the power safely and productively to the load focuses. Taking a gander at the general system of financial matters, HVDC transmission systems are most aggressive at transmission separates more than 100 km or power levels of between around 200 and 900 MW. The HVDC transmission offers numerous points of interest over HVAC.

1. Sending and receiving end frequencies are independent.
2. Transmission distance using dc is not affected by cable charging current.
3. Offshore installation is isolated from mainland disturbances and vice versa.
4. Power flow is fully defined and controllable.
5. Cable power losses are low.
6. Power-transmission capability per cable is higher.

## 3.DIRECT-DRIVE TECHNOLOGY FOR WIND TURBINES

Direct-drive applications are on increase because the gearbox can be eliminated. As compared to a conventional gearbox-coupled wind turbine generator, a direct-drive generator has reduced the overall size, has lower installation and maintenance cost, has a flexible control method and quick response to wind fluctuations, and load variation. For small wind turbine, permanent magnet synchronous machines are more popular because of their higher efficiency, high-power density, and robust rotor

structure as compared to induction and synchronous machines.

## 4.TECHNICAL ISSUES FOR GRID CONNECTED RENEWABLE ENERGY SOURCES

Renewable energy in recent years become more and more common, due to the large increase in generation from renewable energy sources such as small hydropower stations, wind turbines, photovoltaic (PV) etc.

## 5.TECHNIQUES FOR POWER QUALITY IMPROVEMENT

Resistors, capacitors, and inductors all consume power once a current goes through them, and unequipped for power pick up. Consequently, any RLC filter might be a passive filter, especially with the inductors encased. Another real normal for the passive filters is that the filters don't might want to relate outer power supply for operation. Passive filters additionally make a little measure of clamour, because of the warm commotion in the components. A few disadvantages for passive filters can filter just the frequencies Resonances will happen to owe to the collaboration between the passive filters and different loads, with erratic outcomes. To leave these drawbacks, recent endeavours are concentrated in the advancement of active filters. Filters with parts like operational enhancers, transistors, or alternative active parts are alluded to as active filters. They utilize capacitors and resistors, anyway not inductors.

## 6.NEW ENERGY POWER GRID-INTEGRATION ON GRID POWER ELECTRONICS

With the development of science and technology and the national economy, electricity is an important resource for people's lives. The coal, oil and other fossil fuel bear 90% of the traditional power load. Entering the new century, we should pay attention to energy and environmental issues. On the one hand, with the start of the industrial revolution, the consumption of traditional energy sources rapid increases and traditional energy is non-renewable resources. Excessive development and using will eventually lead to depletion of resource. On the other hand, a large number of traditional energy which use makes ecological deterioration. Especially the emissions of carbon dioxide cause the greenhouse effect.

## 7.IMPACT OF DISTRIBUTED POWER FOR POWER QUALITY

The system of distributed generation was included in the distribution system. It is a fundamental pattern for the improvement of distributed power generation. In any case, with the penetration of DG in power systems expanding, it has an impact on the power system, including the power system power quality, load anticipating, system arranging, system flow, system failure and security devices. This area will consider the effect of power quality, and break down the deviation of the voltage and harmonic for power quality. The distinguished power level of the transport will be not exactly without getting to distributed power. In light of this data, the system transport side voltage is set lower than the genuine needs of the client, and this will make the voltage of part of the client is below a specific standard.

## 8.CONCLUSION

This paper gives the report on two forms of renewable energy wind and solar energy, and on the role of smart grids in addressing the problems associated with the efficient and reliable delivery and use of electricity and with the integration of renewable sources. In this research different power quality issues are addressed and a FACTS device STATIC COMPENSATOR (STATCOM) is connected at a point of common coupling for grid connected wind turbine to reduce the power quality problems like harmonics in the grid current, by injecting superior reactive power in to the grid of wind turbine.

And also an active power filter implemented with a four leg voltage-source inverter using DQ (Synchronous Reference Frame) based Current Reference Generator scheme is presented for renewable based distributed generation system of PV cell. As the world's electricity demand increases, more environmental constraints is given to conventional energy sources such as fossil or nuclear energy.

The power quality issues of wind power grid include technical problems and administrative difficulties of the power grid in our nation. Accordingly, the search subjects about the wind cultivate power quality appraisal and control measure sown imperative hypothetical and common sense centrality. The unbalanced loads or DGs connected in MG will interactive with ESS inverter, which would debase the voltage control performance of inverter and prompts MG voltage to unbalance. In this research, a novel UTVCS given negative-arrangement compensation is proposed. Rather than the ordinary control strategy, with the proposed UTVCS, both the inverter control and the operation mode of MG are considered, subsequently the method in this research has focal points in enhancing the MG power quality, and it is essentially realized.

## REFERENCES

[1]. Wang, Y; Beibei, R; Qing-Chang, Z. Robust Power Flow Control of Grid-connected Inverters, IEEE Transactions on Industrial Electronics, vol. 63, no. 11, pp. 6687–6897, 2016.

[2]. Vechium, I; Camblong, H; Tapia, G; Curea, O; Dakyo, B. Modelling and control of four-wire voltage source inverter under unbalanced voltage condition for hybrid power system applications. In Power Electronics and Applications, 2005 European Conference on, pp. 10-pp. IEEE, 2005

[3]. Rodriguez, P; Pou, J; J. Bergas; Candela, J; Burgos, R.P; D.Boroyevich, Decoupled double synchronous reference frame PLL for power converters control, IEEE Transactions on Power Electronics, Vol. 22, No.2, pp.584-592, 2007.

[4]. Ciobotaru, M; Teodorescu, R; Blaabjerg, F. A new single-phase PLL structure based on second order generalized integrator, June 2006, Power Electronics Specialists Conference, pp. 1-6.

[5]. IneVandoorn, Bart Meersman, Jeroen De Kooning, and LievenVandevelde, "Controllable Harmonic Current Sharing in Islanded Micro grids: DG Units With Programmable Resistive Behavior Toward Harmonics" IEEE Transactions on Power Delivery, Vol. 27, No. 2, April 2012.

[6]. Po-Tai Cheng, Chien-An Chen, Tzung-Lin Lee, and Shen-Yuan Kuo "A Cooperative Imbalance Compensation Method for Distributed-Generation Interface Converters" IEEE Transactionson Industry Applications, Vol. 45, No. 2, March/April 2009.